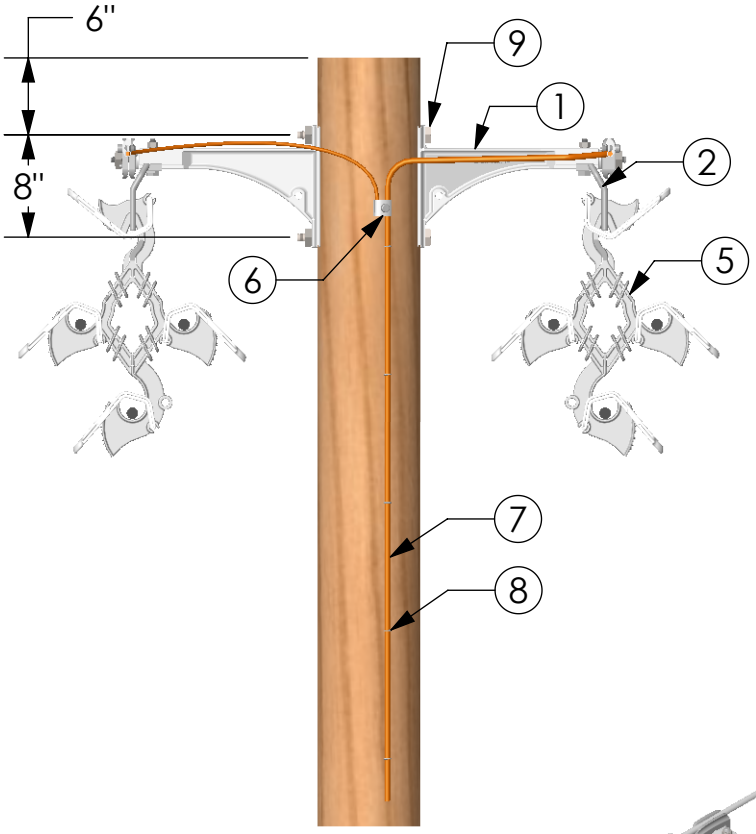

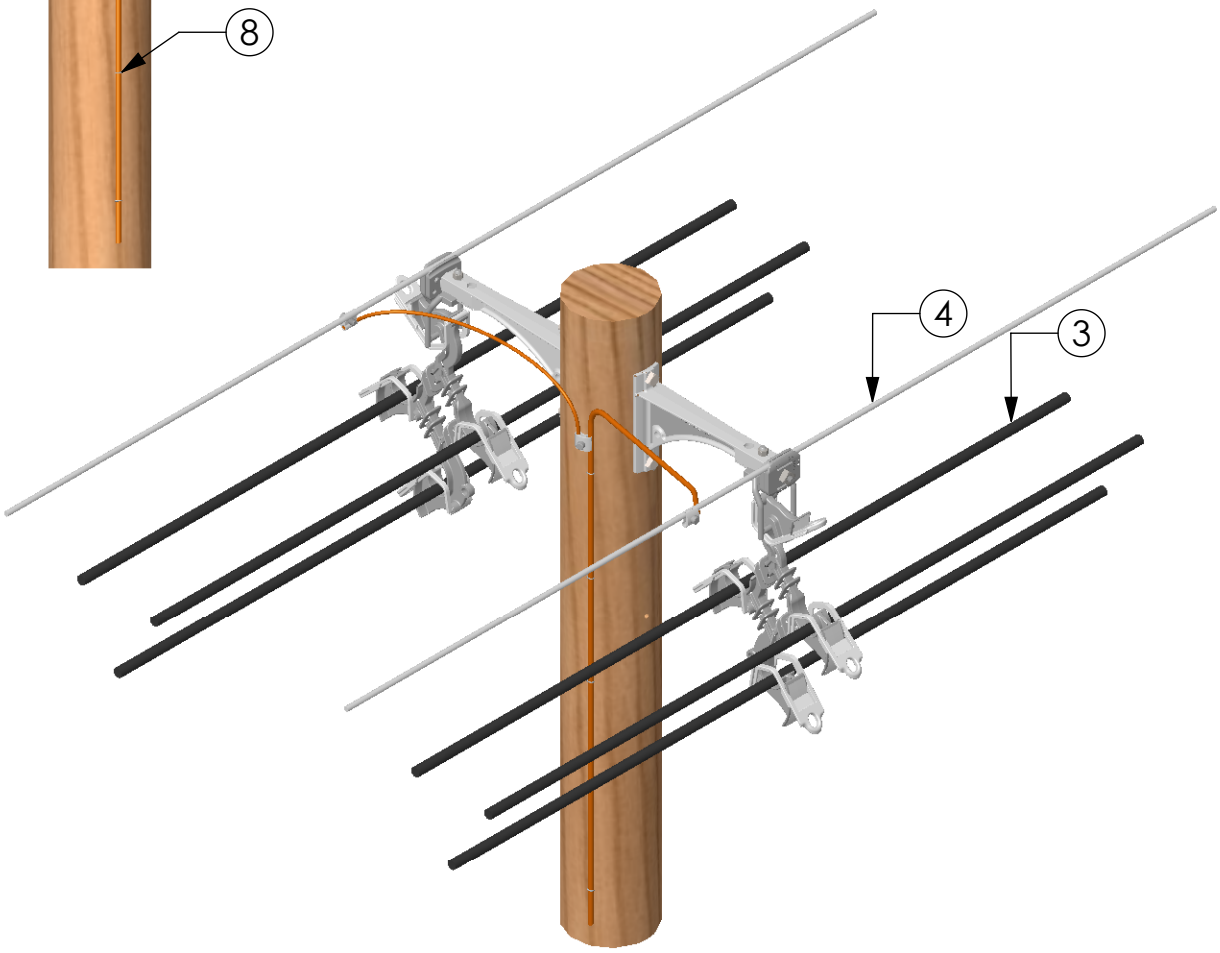

ITEMS IN RED NOT SUPPLIED BY HENDRIX

ITEM	DESCRIPTION	QTY
1	MESSENGER BRACKET, HENDRIX TYPE BM-14	2
2	STIRRUP, HENDRIX TYPE TS-1	2
3	HENDRIX AERIAL CABLE, (SIZE AND VOLTAGE RATING AS REQUIRED)	AS REQ.
4	MESSENGER (SIZE AND TYPE AS REQ.)	AS REQ.
5	HENDRIX RTL-15 SPACER	AS REQ.
6	CONNECTOR (SIZE AND TYPE AS REQUIRED)	3
7	GROUND WIRE, SOFT DRAWN COPPER, SOLID, #6 AWG	AS REQ
8	GROUND WIRE STAPLE	AS REQ
9	MACHINE BOLT, 5/8" X REQ. LENGTH	2

DESIGN PARAMETERS
15kV
0-6° LINE ANGLE

TITLE
BACK TO BACK BM-14 CONSTRUCTION
USING RTL-15

DRAWING NO. **AC1308-01** REV **0**

DATE
10/1/13

Hendrix™
AERIAL CABLE SYSTEMS
53 OLD WILTON RD. • MILFORD, NH 03055 • 603-673-2040