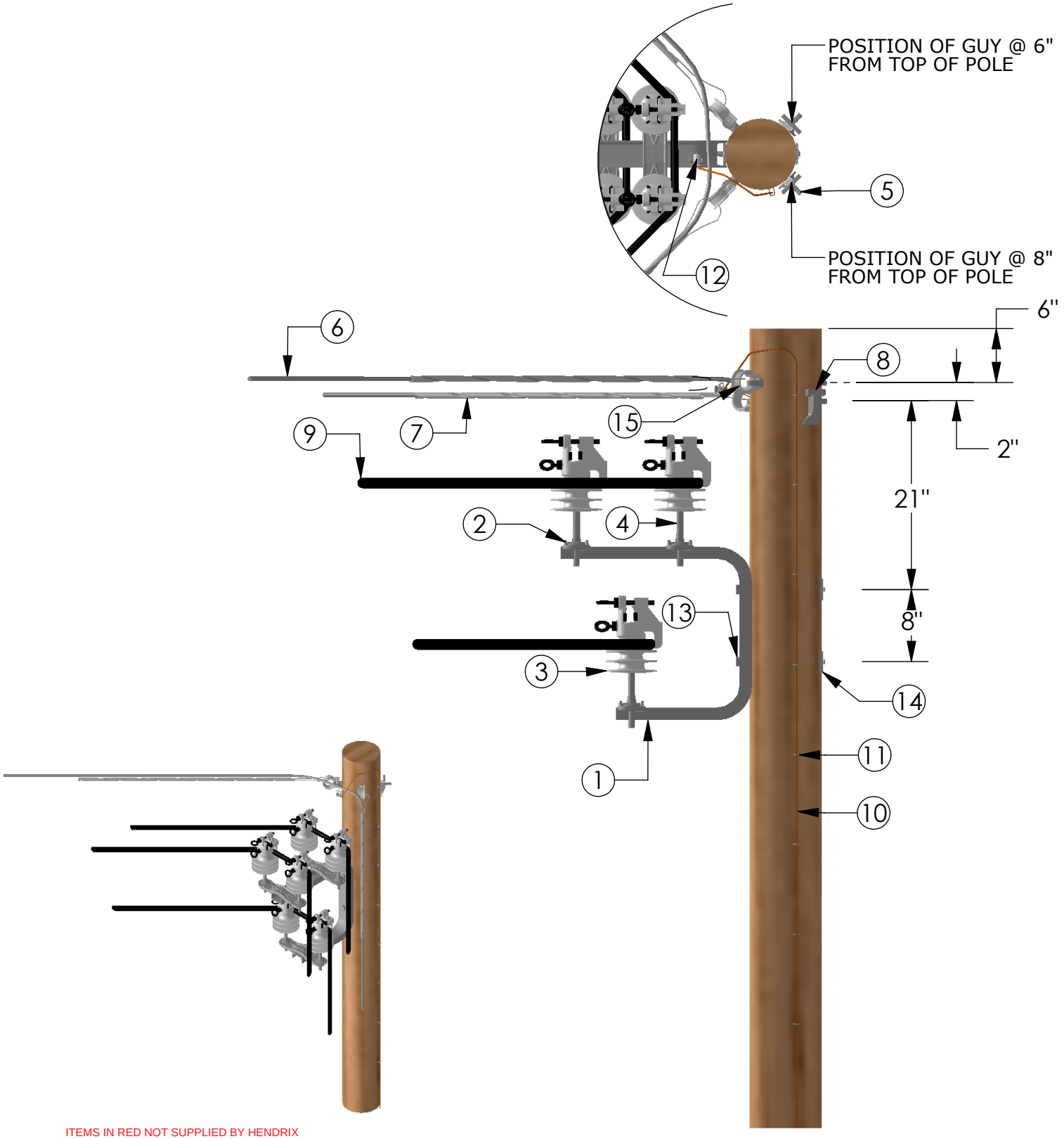

ITEMS IN RED NOT SUPPLIED BY HENDRIX

ITEM	DESCRIPTION	QTY
1	ANGLE BRACKET, HENDRIX TYPE BA3 - 15	1
2	DOUBLE INSULATED PLATE, HENDRIX TYPE 2IP	3
3	INSULATOR TYPE, HENDRIX HPI-15VTP	6
4	INSULATOR PIN, HENDRIX TYPE SSP-2	6
5	EYEBOLT, 3/4" X REQ. LENGTH	2
6	MESSENGER (SIZE AND TYPE AS REQUIRED)	AS REQ
7	PRESHAPED MESSENGER GRIP	2
8	GUY HOOK, CONTINENTAL NO. GA-56X, OR EQUAL	2
9	HENDRIX AERIAL CABLE (SIZE AND VOLTAGE AS REQUIRED)	AS REQ
10	GROUND WIRE, SOFT DRAWN COPPER, SOLID, #6 AWG	AS REQ
11	GROUND WIRE STAPLE	AS REQ
12	CONNECTOR (SIZE AND TYPE AS REQUIRED)	1
13	MACHINE BOLT 5/8" X REQ. LENGTH	2
14	SQUARE WASHER, 2-1/4" X 2-1//4" X 3/16", MIN.	2
15	THIMBLE CLEVIS, HENDRIX TYPE HDTC	2

DESIGN PARAMETERS
15kV
61° -90° ANGLES

TITLE
CONSTRUCTION USING BA3-15 AND 2IP PLATES

DRAWING NO. **AC1246-01** REV **2**

DATE
8/16/06

Hendrix™
AERIAL CABLE SYSTEMS
53 OLD WILTON RD. • MILFORD, NH 03055 • 603-673-2040

A Marmon/Berkshire Hathaway Company