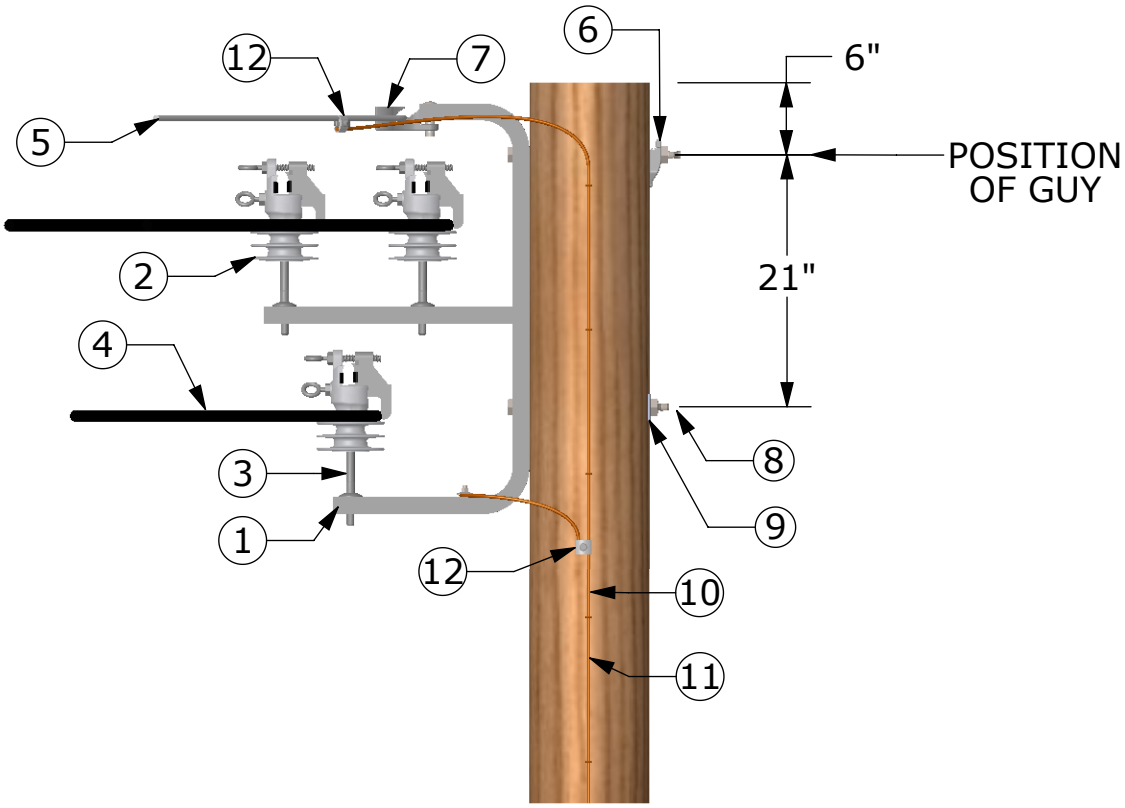

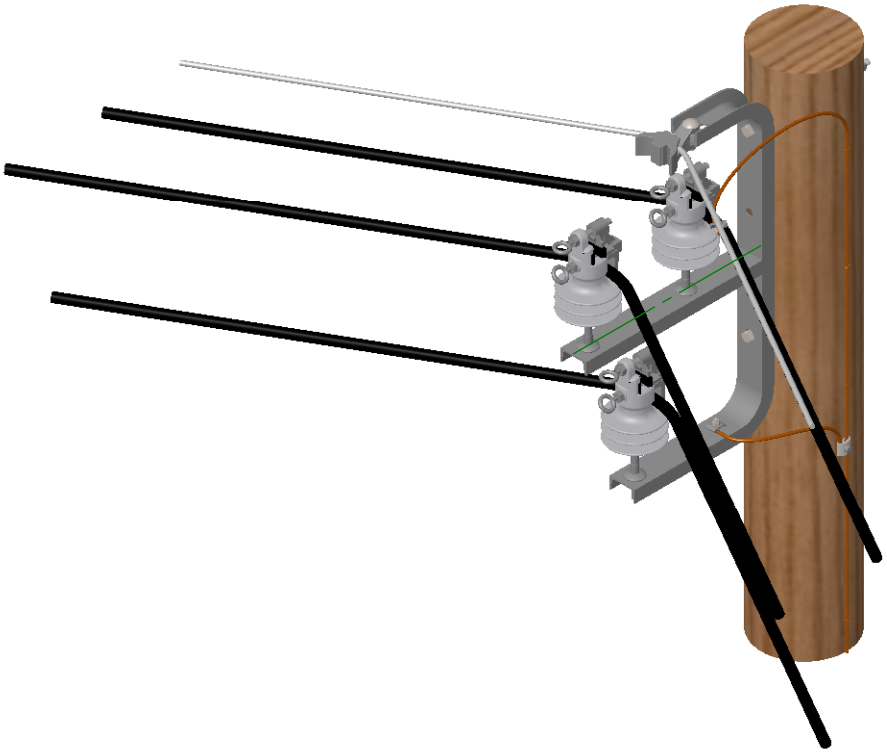

ITEMS IN RED NOT SUPPLIED BY HENDRIX

ITEM	DESCRIPTION	QTY
1	ANGLE BRACKET, HENDRIX TYPE BA4-15	1
2	INSULATOR , PIN TYPE, HENDRIX HPI-15VTP	3
3	INSULATOR PIN, HENDRIX TYPE SSP-2	3
4	HENDRIX AERIAL CABLE (SIZE AND VOLTAGE AS REQUIRED)	AS REQ
5	MESSENGER WIRE (SIZE AND TYPE AS REQUIRED)	AS REQ
6	GUY HOOK	1
7	ANGLE CLAMP, HENDRIX CATALOG NO. CMA-1	1
8	MACHINE BOLT 5/8" X REQUIRED LENGTH	2
9	SQUARE WASHER 2-1/4" X 2-1/4" X 3/16" MIN	2
10	GROUND WIRE, SOFT DRAWN COPPER, SOLID #6 AWG	AS REQ
11	GROUND WIRE STAPLE	AS REQ
12	CONNECTOR (SIZE AND TYPE AS REQUIRED)	2

DESIGN PARAMETERS
15kV
LINE ANGLES: 7-60°

TITLE
ANGLE CONSTRUCTION USING BA4-15

DRAWING NO. **AC1242-01** REV **3**

DATE
12/7/10

Hendrix®
AERIAL CABLE SYSTEMS
53 OLD WILTON RD. • MILFORD, NH 03055 • 603-673-2040